Data Sheet

Article number: 23102083114
Description: E+G Handwheel
EYK.400+I A-20-C4

Measures

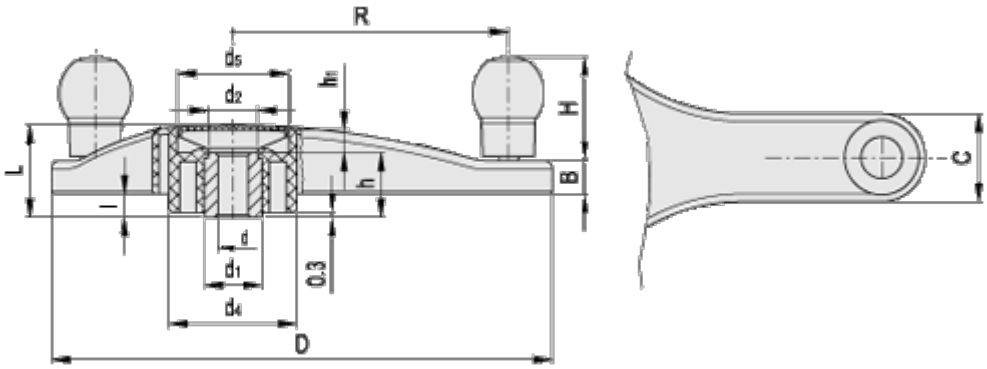

B	= 21	H	= 65
C	= 55	h	= 38
D	= 400	h1	= 14
d1	= 35	l	= 12.0
d2	= 33	L	= 54
d4	= 80	R	= 172.5
d5	= 70		
d h7	= 20		

Product drawings and brochures of any kind may contain errors for which Brd. Klee A/S cannot be liable.